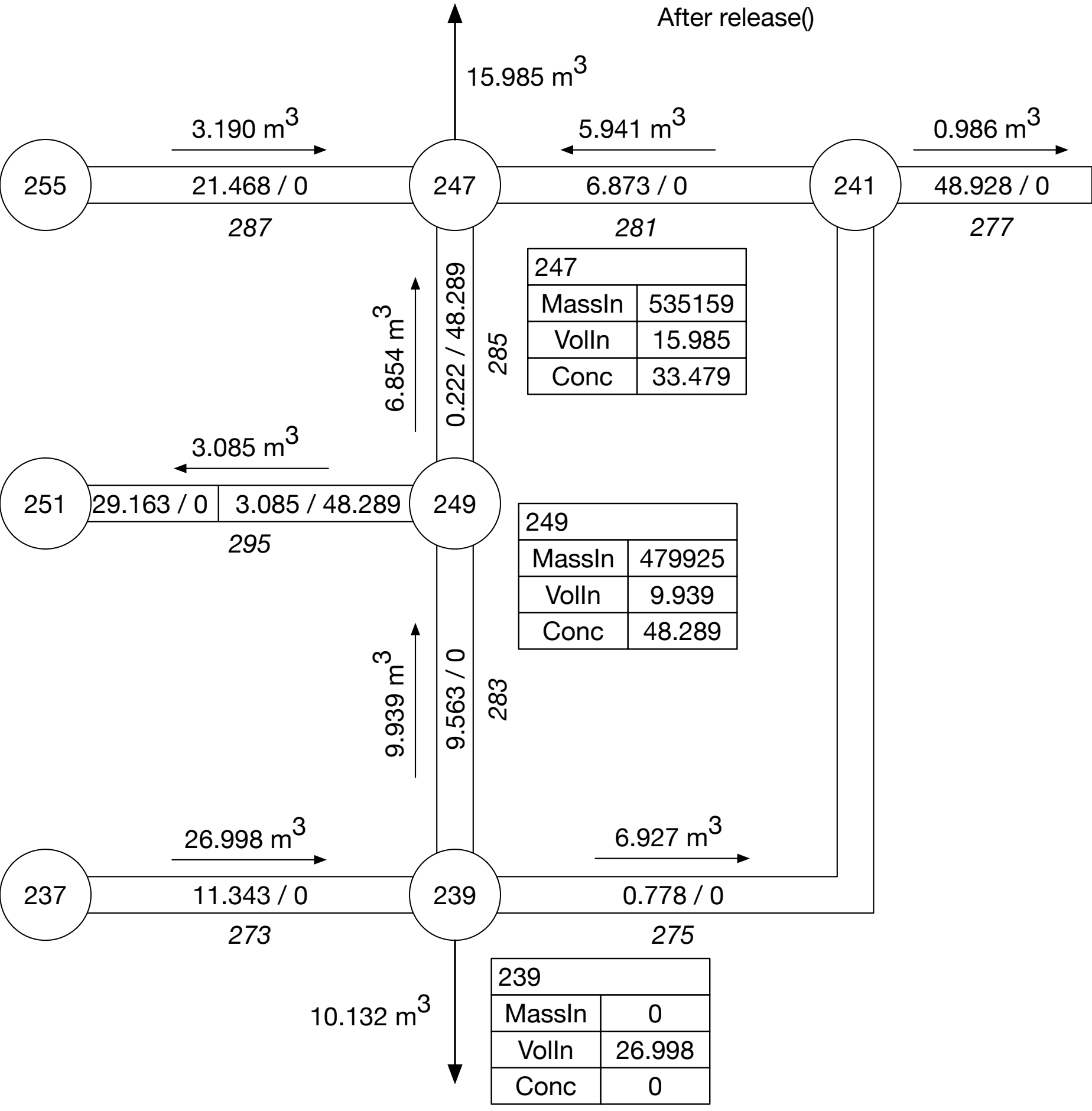
After release()
15.985 m3
3.190 m3
5.941 m3
0.986 m3
255
21.468 / 0
287
247
6.873 / 0
281
241
48.928 / 0
277
247
MassIn 535159
VolIn 15.985
Conc 33.479
6.854 m3
0.222 / 48.289
285
3.085 m3
251
29.163 / 0
3.085 / 48.289
295
249
249
MassIn 479925
VolIn 9.939
Conc 48.289
9.939 m3
9.563 / 0
283
26.998 m3
6.927 m3
237
11.343 / 0
273
239
0.778 / 0
275
10.132 m3
239
MassIn 0
VolIn 26.998
Conc 0