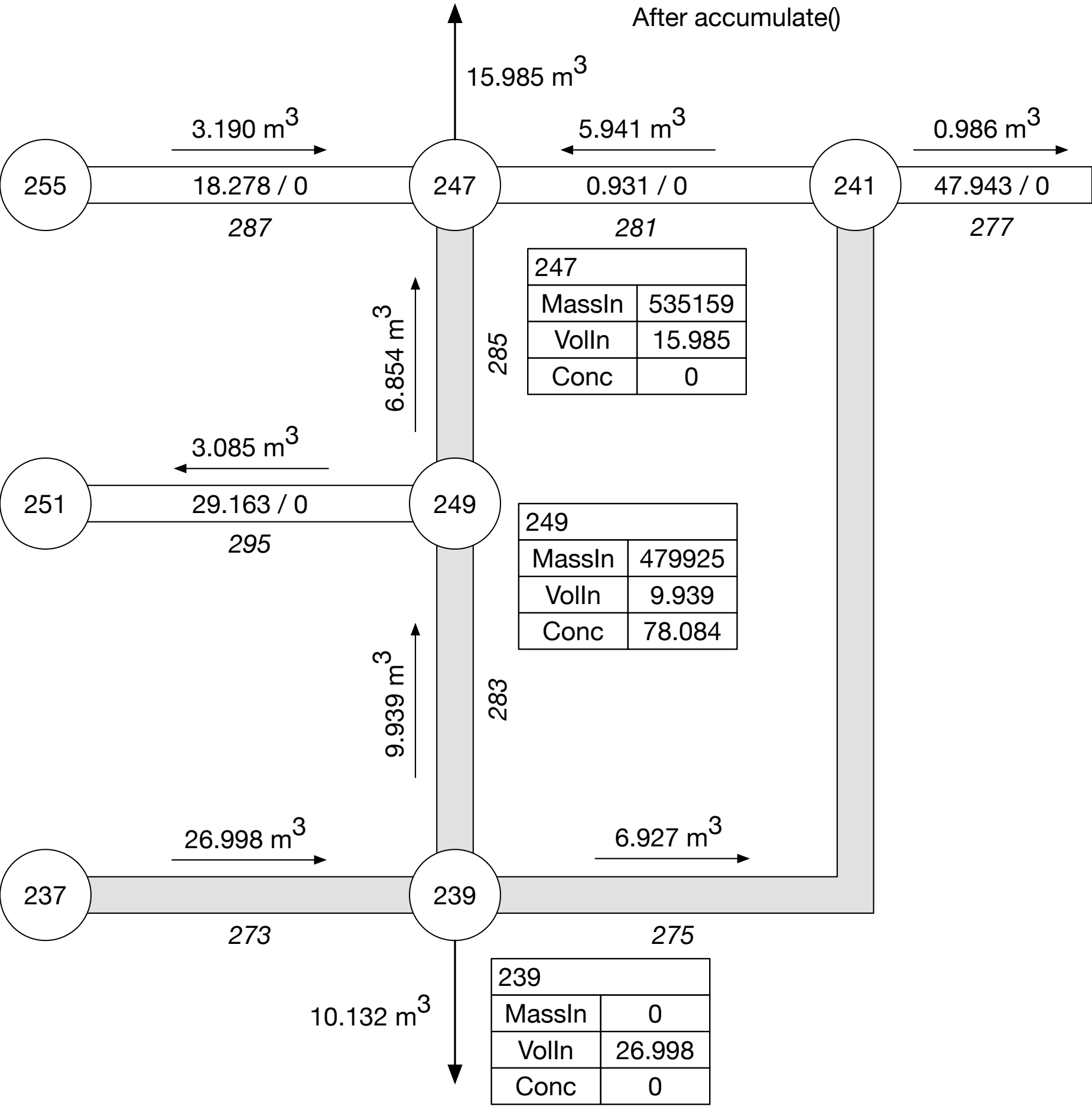
After accumulate()
15.985 m3
3.190 m3
5.941 m3
0.986 m3
255
18.278 / 0
287
247
0.931 / 0
281
241
47.943 / 0
277
247
MassIn 535159
VolIn 15.985
Conc 0
6.854 m3
285
3.085 m3
251
29.163 / 0
295
249
249
MassIn 479925
VolIn 9.939
Conc 78.084
9.939 m3
283
26.998 m3
6.927 m3
237
239
273
275
10.132 m3
239
MassIn 0
VolIn 26.998
Conc 0