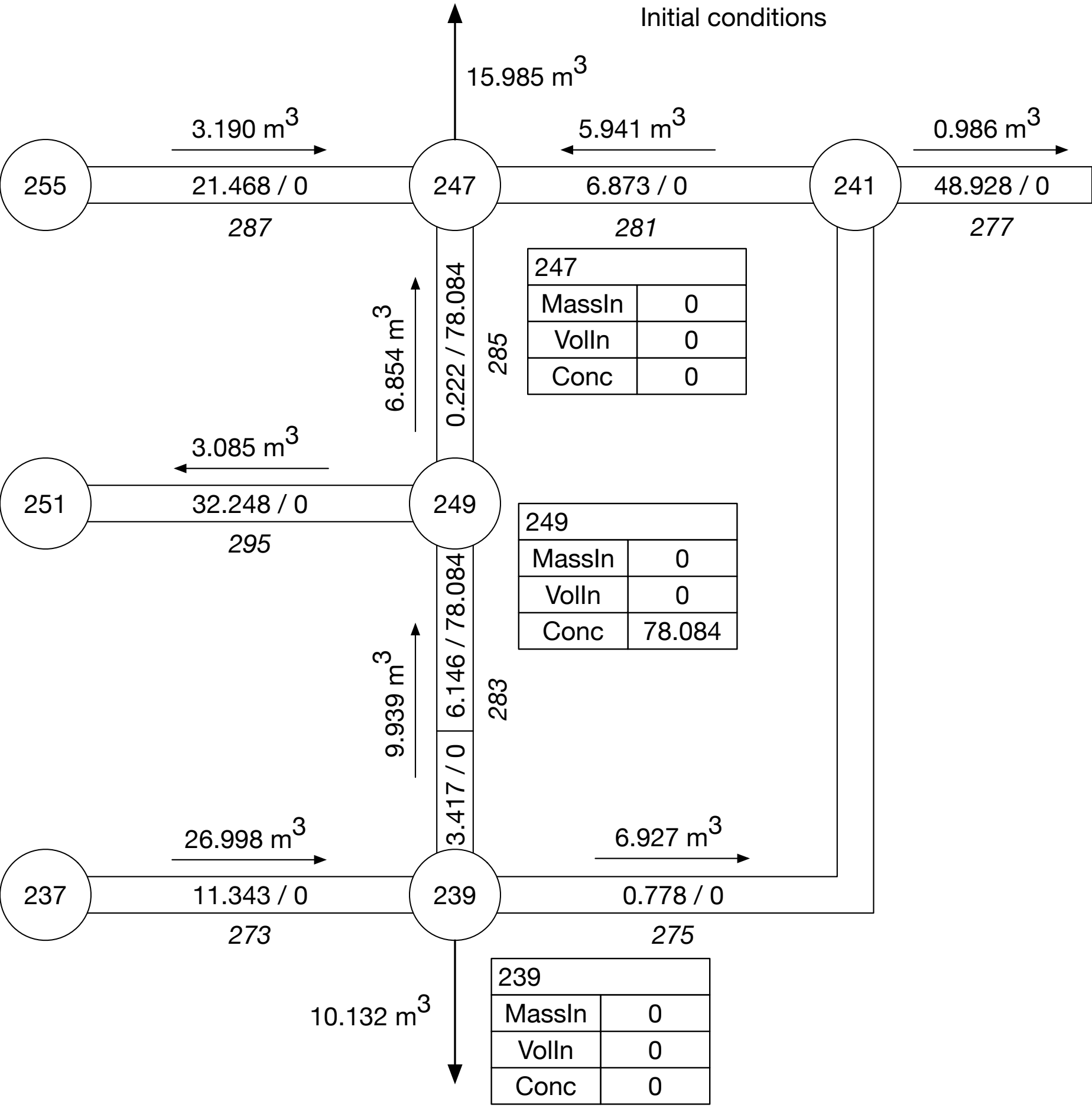
Initial conditions
15.985 m3
3.190 m3
5.941 m3
0.986 m3
255
21.468 / 0
287
247
6.873 / 0
281
241
48.928 / 0
277
6.854 m3
0.222 / 78.084
285
247
MassIn 0
VolIn 0
Conc 0
3.085 m3
251
32.248 / 0
295
249
249
MassIn 0
VolIn 0
Conc 78.084
9.939 m3
6.146 / 78.084
3.417 / 0
283
26.998 m3
6.927 m3
237
11.343 / 0
273
239
0.778 / 0
275
10.132 m3
239
MassIn 0
VolIn 0
Conc 0